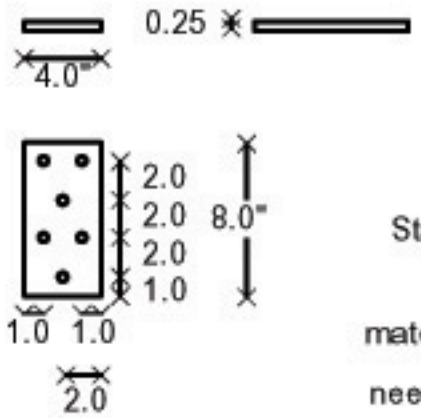

Standoff strap

material: 1/4" Al

need: 4

o drill thru 10-32 (#10 drill)

tolerance: +/- 0.10

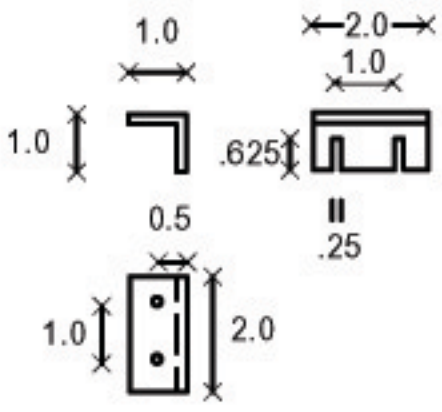

fiber panel mount

drill thru for 10-32 (#10 drill)

material: 1" Aluminum angle

need: 12

tolerance: 0.015