Cage Bottom Weld Assembly

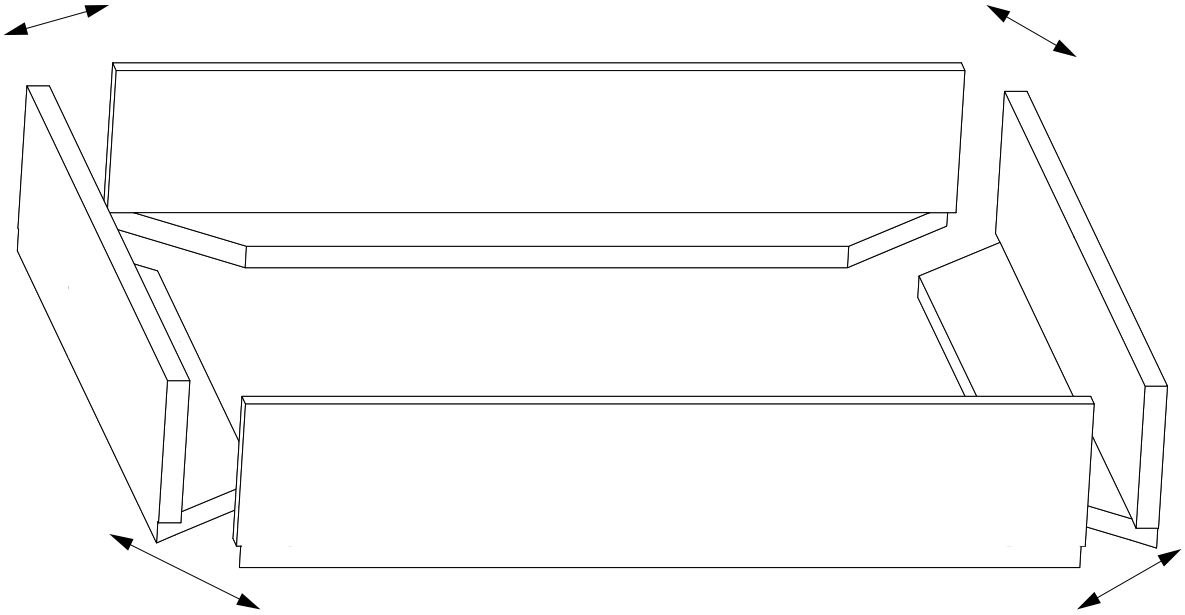

weld on outside and grind bottom surface to <1/32"